2018 International Conference on Chemical, Physical and Biological (ICCPB2018)

Research on the Simulation Circuit of Four Level Chua's Circuit Chaotic Secure Communication Based on Multisim Software

Hui Zhang
Jiangsu Vocational College of Medicine
Yancheng, 224006, China

***Abstract*—Chaos is a deterministic nonlinear motion. Chua's circuit has simple structure, but it has complex chaotic dynamics characteristics, and has become an important research object in the field of chaos control. Based on Chua's circuit, a chaotic secure communication system is constructed. In this paper, Multisim software is used to simulate the circuit. By changing the parameters, the phase-orbit changes of each period of the system are obtained, and the phenomena encountered in the experiment are briefly discussed.**

Keywords—Multisim software, four level Chua's circuit, chaotic secure communication

I. INTRODUCTION

Chaos is one of the most important scientific discoveries in the twentieth century. It is known as the third physical revolution after relativity and quantum mechanics, which breaks the boundary between certainty and randomness and presents a new era of classical mechanics. Chaos refers to seemingly random irregularities in a deterministic system. The system is described by deterministic theory and its behavior is uncertain, non-repeatable and unpredictable. The task of chaos is to seek the chaos of law and deal with it.

Chua's circuit is a nonlinear chaotic circuit named after Cai Shaotang of the University of California, Berkeley. Chua's circuit contains only four basic elements and a nonlinear resistor. The experimental circuit is simple. The chaotic attractors of single and double vortices can be observed by adjusting the resistance. Therefore, Chua's circuit has become an example of chaotic mathematics and physical experiments. In order to produce more complex chaotic phenomena, make them more unpredictable, and thus better ensure the security of communication, it is particularly important to study the circuit of improved fourth-order Chua's circuit on the basis of Chua's circuit. Many scholars have studied the stability of the fourth-order Chua's circuit, which has practical significance and analysis tools.

II. BRIEF INTRODUCTION OF CHUA'S CIRCUIT

Chua's circuit has always been complex dynamic behavior that the simplest chaotic oscillating circuit produces nonlinear circuits. In 1983, Cai Shaotang witnessed experiments in Japan to try to generate chaos in analog circuits based on Lorentz equations. He realized that chaos could be generated by piecewise linear circuits with at least two unstable equilibrium points (one providing extension, the other providing folding trajectories). He demonstrates systematically that a simple voltage-controlled nonlinear resistor in a third-order piecewise linear circuit can produce chaos. Practice has proved that the drive characteristics of the voltage-controlled nonlinear resistance Rn should satisfy at least two unstable equilibrium points, so he invented Chua's circuit as shown in Figure 1.

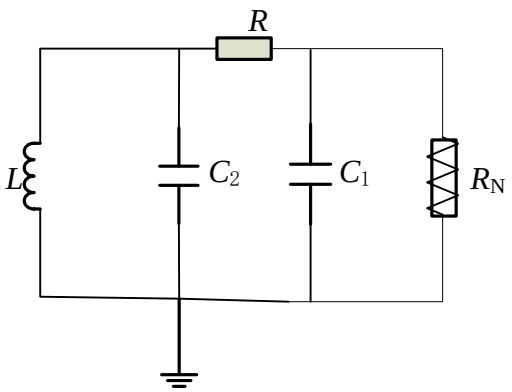

Figure 1 Chua's circuit diagram

The nonlinear resistance RN in the Chua's circuit is also known as the diode of Chua's circuit. It can be implemented in many ways. As can be seen from the diagram, Chua's circuit is a third-order autonomous circuit composed of resistance, capacitance, inductance, Chua's circuit diode. The following conditions can generate chaos:

(a) The nonlinear resistance is not less than 1.

  DOI: 10.25236/iccpb.2018.030

(b) The linear effective resistance is not less than one.

(c) No less than 3 storage elements.

III. A BRIEF INTRODUCTION TO CHAOS

Once the oscillation system occurs, the period doubling bifurcation will lead to chaos. Chaos is a state of motion. From deterministic system to chaos, there are period doubling bifurcations, paroxysmal, quasi-periodic and so on. For one mapping:

$$X_{n+1} = \mu X_n (1 - X_n)$$

Periodic bifurcation occurs when the parameter μ increases, that is, period 1 bifurcates out of period 2, and period 2 bifurcates out of period 4... If the parameters of the three adjacent bifurcation points are: μn-1，μn，μn+1 respectively, the ratio is as follows when n→∞:

$$\delta = \lim \frac{\mu_n - \mu_{n-1}}{\mu_{n+1} - \mu_n} = 4.6992016091\cdots$$

This is an irrational constant, and δ is the Fagin Baum constant.

IV. CIRCUIT STRUCTURE AND SIMULATION OF SECURE COMMUNICATION BASED ON CHUA'S CHAOTIC CIRCUIT

Chua's circuit is divided into a stable subsystem and an unstable subsystem. The stable part of Chua's circuit is used as the drive system, and the stable part of another Chua's circuit is used as the response system. Because the response system is stable and the same driving system, its trajectory is not affected by the initial conditions of the wavelet fluctuation, and it will converge to the same trajectory as the driving system to achieve chaotic synchronization. In this way, the chaotic signal generated by the driving system is taken as the carrier. The information signal is taken as the modulation signal and transmitted in the chaotic signal. In the receiver, the chaotic carrier extracts information from the mixed signal by using the generation rules of the chaotic signal, and then the signal is recovered simply by signal processing, so the secure communication can be realized.

Multisim simulation software is used to simulate the chaotic secure communication system.

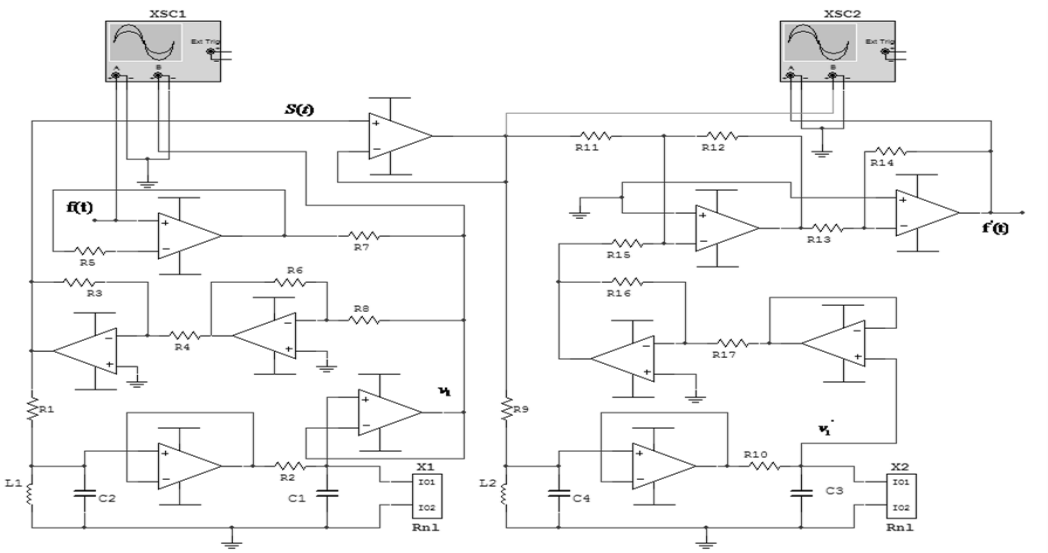

Figure 2 Simulation of chaotic secure communication system by Multisim simulation software

Triangular wave and square wave are used as information signals respectively, and the simulation results are shown in Figure 3. Figure 3 (a) and figure 3 (b) are the results of triangular wave simulation as information signals. The upper part of Figure 3 (a) is the information signal f(t), and the lower part is the encrypted chaotic carrier signal V1; the upper part of Figure 3 (b) is the decrypted information signal, and the lower part is the transmitted chaotic signal s(t). From the graph we can see that the information signal f(t) is completely different from the transmission signal S(t), which implements encryption. The recovered signal is basically the same as the information signal, and the implementation of secret communication. Figure (c) and Figure (d) show that the simulation results of square waves are used as information signals. The simulation results show that the chaotic signal generation circuit is Chua's circuit, and the information signal is encrypted and transmitted. Chua's circuit chaotic signals of the same structure are used for decryption.

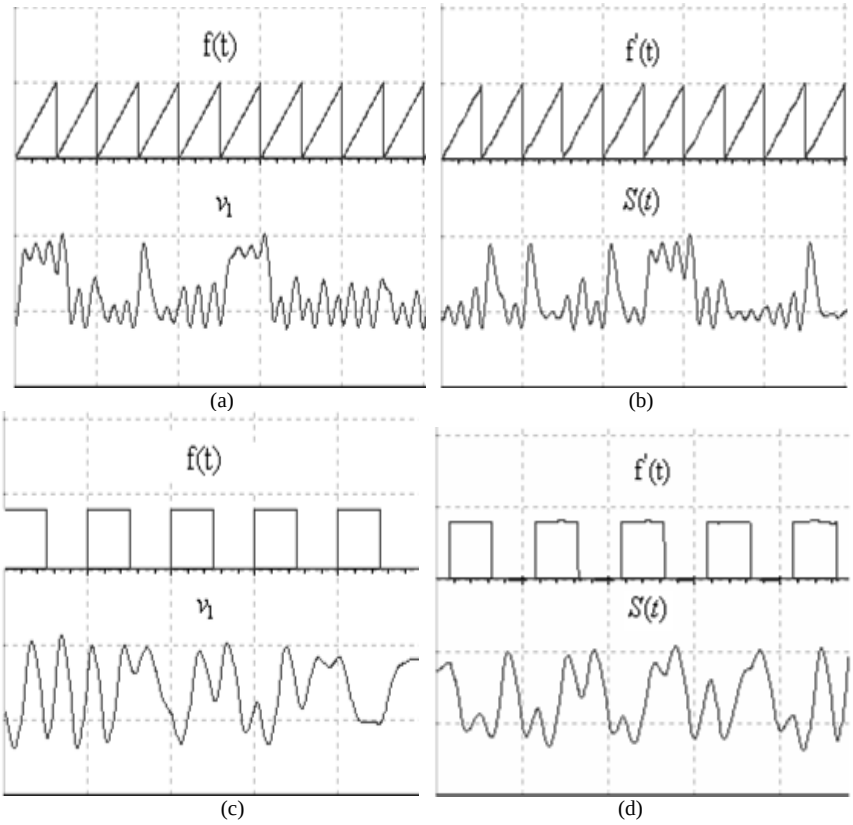

Figure 3 simulation results of chaotic communication system based on Chua's circuit

V. CONCLUSION

Chua's circuit is sensitive to parameters and its dynamic characteristics may vary greatly due to the smallest inductance difference. By studying the circuit theory of Chua's circuit, the nonlinear resistance and inductance are improved, the adjustable range of nonlinear resistance is enlarged and the equivalent inductance is close to the theoretical value. In this paper, Chua's circuit is used to construct a chaotic secure communication system, and the feasibility of chaotic secure communication is verified by simulation.

REFERENCES

[1] Mamat M, M. S W S, Maulana D S. Numerical simulation chaotic synchronization of Chua circuit and its application for secure communication[J]. Applied Mathematical Sciences, 2013, 193(19):5420-30.

[2] Lin T C, Huang F Y, Du Z, et al. Synchronization of Fuzzy Modeling Chaotic Time Delay Memristor-Based Chua's Circuits with Application to Secure Communication[J]. International Journal of Fuzzy Systems, 2015, 17(2):206-214.

[3] Halimi M, Kemih K, Ghanes M. Circuit Simulation of an Analog Secure Communication based on Synchronized Chaotic Chua's System[J]. Applied Mathematics & Information Sciences, 2014, 8(4):1509-1516.

[4] Chun-Ming L I, Sheng-Kai J I. Simulation of Chua chaotic secure communication systems[J]. Modern Electronics Technique, 2013.

[5] Ws M S, Maulana D S, Mamat M, et al. Nonlinear Dynamics of Chaotic Attractor of Chua Circuit and Its Application for Secure Communication (2011)[J]. Applied Mathematical Sciences, 2013, 193(19):5420-30.

[6] Zebin L I, Fuqiang L I, Yao Y, et al. The Simulation Study of Chaotic Secure Communication with Modified Chua's Circuit[J]. Journal of West Anhui University, 2014.

[7] Al-Hussaibi W A. Impact of filtering chaotic signals on secure wireless communication systems based Chua's circuit[C]// International Conference on Innovations in Information Technology. IEEE, 2013:89-94.