# An Effective Design Scheme for Acoustic Measurement Amplifier

1st Rongguang Sun
*Underwater Acoustic Engineering*
*Navy Submarine Academy*
Qingdao, China
sun_rg@sohu.com

2nd Shuping Han
*Underwater Acoustic Engineering*
*Navy Submarine Academy*
Qingdao, China
sphan@163.com

3rd Xin Ma
Underwater Acoustic Engineering
Navy Submarine Academy
Qingdao, China
mx0537@tom.com

***Abstract*—A high speed integrated operational amplifier OP37 is used to design and debug an underwater acoustic amplifier and realize the amplification and filtering of the received underwater acoustic signal. The test results show that the design scheme is effective and reliable.**

***Keywords—Underwater acoustic, Measurement, Amplifier***

## I. THE PROPOSAL OF THE PROBLEM

Sound wave is the only form of energy radiation that can be transmitted far away in the ocean [1]. In underwater acoustic measurement, the transmission energy converter converts electrical signals into acoustic signals and radiates into water. The receiving transducer converts acoustic signals into electrical signals. Because the received underwater acoustic signals are very weak, it is difficult to analyze and process them, so we need to amplify them. The function of the measurement amplifier designed in this paper is to amplify the micro volt level signal to the volt level signal and filter out the noise (mainly low frequency noise).

## II. TECHNICAL INDICATORS

In designing an acoustic measurement amplifier, in addition to the amplification of amplifiers, input impedance, output impedance, bandwidth and equivalent noise of input terminals should also be considered.

The technical indicators of the measuring amplifier designed in this paper are as follows:

(1) The amplification of amplifiers > 50dB

(2) Input impedance > 20KΩ

(3) Equivalent noise of input terminals < 20uv

(4) Bandwidth450KHz~750KHz

(5) Output impedance < 1KΩ

(6) Maximum output voltage < 10v(dynamic±10v)

## III. A BRIEF INTRODUCTION TO OP37

The operational amplifiers used in this circuit are all high-speed integrated operational amplifiers OP37. This is a brief introduction to the technical performance of OP37.

Limit parameter

(1) Supply voltage VS ±20V

(2) Allowable power consumption PD 500mW

(3) Working temperature 0~70℃

(4) Storage temperature -65~+150℃

(5) External lead temperature(10 seconds of welding time) 300℃

## IV. PERFORMANCE CHARACTERISTICS

(1) Unit gain bandwidth GB 15MHz

(2) Differential voltage gain AVD 200v/mv

(3) Conversion rate SR (typical) 70v/us

(4) Common mode rejection ratio KCMR 80dB

  DOI: 10.25236/iccpb.2018.016

(5)(External circuit plus feedforward technology) 150v/us

(6) Differential mode input impedance ZID 3MΩ

(7) Input offset voltage VIO 2mV

## V. Distribution and function of external lead

The distribution of the OP37's outer lead is shown in Figure 1:

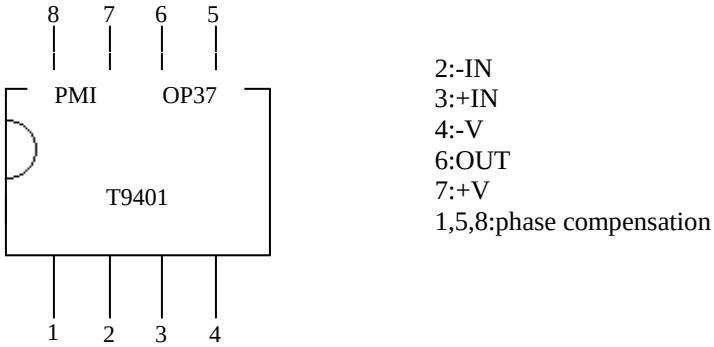


Figure 1. The distribution of the OP37's outer lead

## VI. Characteristic curve

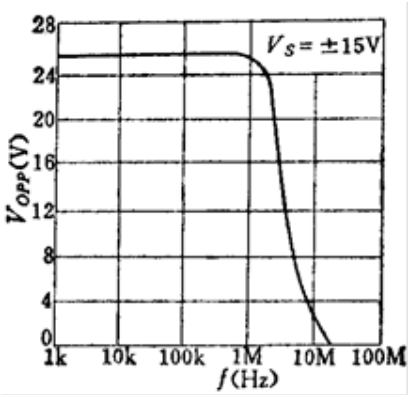


Figure 2. The relationship between the output peak peak voltage VOPP and the frequency f

## VII. Design mentality

The amplifier designed in this paper also filters out noise besides amplifying the received signal. Because the input signal is too small, the filtering effect is not good, so it needs to be amplified and filtered. That is, the idea of amplifying, filtering and amplifying is divided into three stages and step by step design. Due to the limitation of amplitude frequency characteristics, it is not suitable for each level to be amplified too large, so it is amplified by two stages.

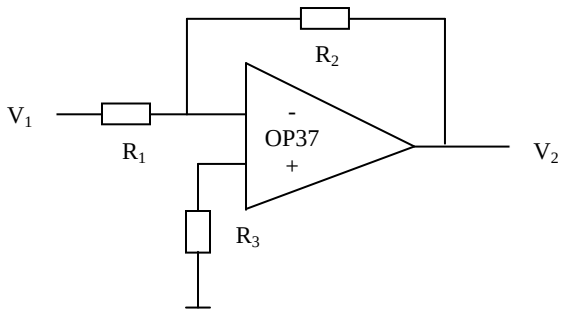


Figure 3. Reverse amplifier circuit

## VIII. Design of a reverse phase amplifier

The first stage uses the inverting amplifier circuit, which is 20 times larger. The circuit form is shown in Figure 3.

etc. R1=10KΩ,R2=200KΩ,R3=10KΩ

Magnification: Au=V2/V1= R2/ R1=20

OP37 is powered by + 15V. To measure its amplitude frequency characteristic, the input signal uses sine wave with peak value of 100mV. The recorded data are as follows:

TABLE 1

| | | | | | | |
|---|---|---|---|---|---|---|
| Frequency (KHz) | 10 | 50 | 100 | 200 | 300 | 400 |
| Amplitude peak (v) | 2.05 | 2.05 | 2.05 | 2.05 | 2.2 | 2.3 |
| Frequency (KHz) | 500 | 600 | 700 | 800 | 900 | 1000 |
| Amplitude peak (v) | 2.4 | 2.5 | 2.6 | 2.6 | 2.4 | 2.1 |
| Frequency (KHz) | 1050 | 1100 | 1200 | 1300 | 1400 | 1500 |
| Amplitude peak (v) | 2.0 | 1.8 | 1.6 | 1.4 | 1.2 | 1.0 |

It can be seen that the amplifier can work normally within 450 ~ 750KHz of the working frequency range.

## IX. DESIGN OF ACTIVE BANDPASS FILTER

The design of active power filter has special manual. We use the infinite gain multiterminal feedback (MFB) circuit. One of its simplest two step bandpass circuits is shown in Figure 4.

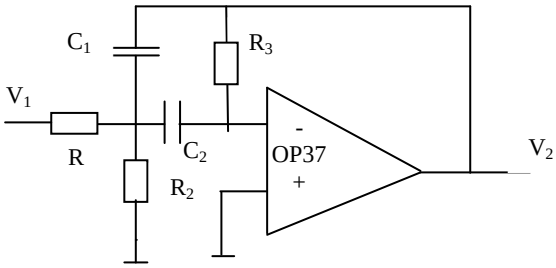


Figure 4. MFB second-order bandpass circuit

The circuit has the least number of components and inverting gain, and QP can reach 10 in the case of medium gain. Because of the introduction of feedback branch, it has good stability and low output impedance. In this circuit, C1= C2=15PF, R1=16KΩ, R2=5.6 KΩ, R3=68 KΩ.

OP37 is still supplied with + 15V, and the input signal is measured with the sine wave of peak 100mV.

The frequency response of the bandpass filter shows that the central frequency of the filter is near 590KHz, and the passband is from 440KHz to 760KHz, which meets the design requirements and has nearly 2 times the voltage gain near the center frequency.

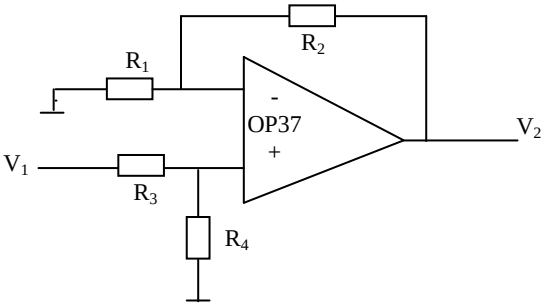


Figure 5. Positive phase amplifying circuit

## X. DESIGN OF POSITIVE PHASE AMPLIFIER

The third stage uses the positive phase amplifying circuit, which has 10 times the amount of amplification. The circuit form is shown in Figure 5.

R1=1KΩ,R2=10KΩ,R3=1KΩ,R4=10KΩ.

Magnification: Au=V2/V1= [R4/(R3+R4)]•[(R1+R2)/R1]=10.

The input signal is measured by a sine wave with a peak value of 100mV, and its amplitude frequency characteristic is measured:

TABLE 2

| | | | | | | |
|---|---|---|---|---|---|---|
| Frequency (KHz) | 10 | 50 | 100 | 200 | 300 | 400 |
| Amplitude peak (v) | 0.98 | 0.98 | 0.98 | 0.98 | 0.99 | 1.0 |
| Frequency (KHz) | 500 | 600 | 700 | 800 | 900 | 1000 |
| Amplitude peak (v) | 1.0 | 1.02 | 1.03 | 1.05 | 1.08 | 1.1 |
| Frequency (KHz) | 1100 | 1200 | 1300 | 1400 | 1500 | 1600 |
| Amplitude peak (v) | 1.1 | 1.15 | 1.15 | 1.1 | 1.08 | 1.05 |

It can be seen that the amplifier can work normally within 450 ~ 750KHz of the working frequency range.

## XI. OVERALL PERFORMANCE TEST OF THE CIRCUIT

The circuits of all levels are directly concatenated, that is, the circuit diagram of the measuring amplifier is obtained.

Its technical performance is as follows:

(1) Magnification: 400 times

(2) Passband: 440KHz to 760KHz

(3) Input impedance: 165 KΩ

(4) Output impedance: 79.3 Ω

(5) The equivalent noise of the input terminal: 10uv

It can be seen that the amplifier meets the requirements of technical specifications.

## XII. CONCLUSIONS

As an indispensable part of underwater acoustic measurement, the design scheme of acoustic measurement amplifier is very flexible. We can make different design schemes according to the requirements of different measurement. The amplifier designed in this paper has less element type and number, has better input and output impedance characteristics, and the effect of noise suppression is obvious. The test results conform to the requirements of technical indicators. It is a simple and reliable design scheme.

## REFERENCES


[1] Chinese integrated circuit [M]. National Defense Industry Press , 1985.

[2] D.E Johnson, J.R Johnson, H.P Moore. Handbook of precise design of active filters[M]. Electronic Industry Press, 1984.

[3] Liu Weiheng. Practical Electronic Circuit Fundamentals[M]. Electronic Industry Press, 2004.

[4] Wang Wujiang, Chen Shukai. Commonly Used IC Quick Reference Manual[M]. Metallurgical Industry Press, 2004.